Policy Research Journal
ISSN (E): 3006-7030 ISSN (P) : 3006-7022 Volume 3, Issue 12, 2025

INTEGRATING GREEN LEADERSHIP AND STAKEHOLDER ENGAGEMENT TO STRENGTHEN GREEN SUPPLY CHAIN MANAGEMENT

Muhammad Usman[*1], Dr. Basharat Raza[2]

[*1]*PhD Scholar in Business Administration, NCBA&E, Lahore, Director Purchase, Government College University, Lahore, Pakistan,*
[2]*Associate Professor in Business Administration, NCBA&E, Lahore, Pakistan*

[*1]dr.usmanbuttar@gmail.com, [2]basharatraza@ncbae.edu.pk

DOI: https://doi.org/10.5281/zenodo.17895728

Keywords
Green Human Resource Management, Green Transformational Leadership, Supplier Relationship Management, Customer Relationship Management, Green Supply Chain Management, Sustainability

Article History
Received: 15 October 2025
Accepted: 25 November 2025
Published: 11 December 2025

Copyright @Author
Corresponding Author: *
Muhammad Usman

Abstract

Purpose: *This research paper focuses on exploring the contribution of sustainability-oriented capability towards promoting the adoption and implementation of green supply chain practices in Pakistani organizations. It also stresses the significance of Green Human Resource Management, Green Transformational Leadership, and stakeholder engagement in advancing the environmentally friendly practices in the dynamic and resource-limited markets. Additionally, the research will aim at offering useful tips to management and policymakers to facilitate reasonable and sustainable organizational practices in the developing economies.*

Design/Methodology: *Partial Least Squares-Structural Equation Modelling (PLS-SEM) and a well-studied survey questionnaire were used in conducting the study.*

Findings: *The research concluded that good human resource practices have positive impacts on leadership in organizations, stakeholder management, and sustainability of operations in organizations. It was demonstrated that leadership and good relationships with suppliers and customers can increase the influence that HR practices have on sustainable supply chain performance. In general, the results indicate that the combination of internal strengths, leadership, and the involvement of stakeholders is essential in the realization of holistic and long-term sustainability results within organizations.*

Theoretical Contribution: *The study is important to literature as it provides an integrated model that correlates Green Human Resource Management, Green Transformational Leadership, and stakeholder management with green supply chain performance. It gives empirical data on the interaction between internal capabilities and leadership behaviors with the external stakeholder engagement in producing sustainability outcomes. Moreover, it applies the Resource-Based View and Stakeholder Theory to the environment of the developing economies.*

Practical Implications*: The results indicate that Green Human Resource Management practices should be embraced by organizations to encourage green behaviors and create green leaders. Moreover, proactive management of relations with suppliers and customers can increase the efficiency of sustainability efforts. In*

practice, managers can realize overall green supply chain performance by incorporating HR practices, leadership growth, and stakeholder involvement in their business and strategic operations.

INTRODUCTION

Sustainability has taken a pivotal role in the global society, as organizations struggle to remain competitive in the long-term, and their operations have been resilient (Miceli et al., 2021). The growing international concern on environmental responsibility is not only because of regulatory pressures and the fact on climate change, but also because of the rising expectations of stakeholders, such as customers, suppliers and investors (Baah et al., 2021). Organizations are also becoming responsible for their ecological footprint, and this has forced them to consider sustainability in their strategic and operational practice (Odeyemi et al., 2024). The factors that make organizations in developing countries, including Pakistan, to experience special difficulties in implementing green projects are the lack of financial and technological resources, policy vagueness, and fluctuating market dynamics (Kumar et al., 2022). These limitations underscore the importance of organizations utilizing internal resources and intangible resources, i.e. knowledge, employee engagement, and organizational culture, to drive sustainable results and sustain competitive advantages.

Green Human Resource Management (GHRM) is one of the most efficient ways of facilitating sustainability in organizations. GHRM incorporates the environmental aspect into HR policies such as green recruitment, green training, performance management, and employee engagement (Ojokuku et al., 2025; Veerasamy et al., 2024). By developing an environmentally conscious and motivated workforce, the GHRM works towards improving employee behavior as well as developing Green Transformational Leadership (GTL) (Weber & Kassab, 2024). Green oriented leaders are very influential in inspiring a team, promoting environmentally friendly projects and integrating sustainability in organizational practices (Boeske, 2023). Sustainability does not occur in isolation and thus involves interaction with other stakeholders. Supplier Relationship Management (SRM) is necessary to keep suppliers at the same level as the organizational environmental standards and Customer Relationship Management (CRM) promotes the environmentally responsible relationship with the customer (Das & Hassan, 2022; Shafiee & Tabaeeian, 2021). These mechanisms form part of Green Supply Chain Management (GSCM), which includes sustainable procurement, production, and logistics operations that help organizations to make sustainability operational throughout their value chains (Letunovska et al., 2023).

Although contemporary literature reflects an increasing interest in the GHRM and green supply chain practices, the literature is primarily focused on large firms within developed economies where well-developed institutional frameworks and strong market environments contribute to the implementation of sustainability-related initiatives (Aray et al., 2021; Zhang et al., 2025). Conversely, organizations in developing nations like Pakistan are characterized with immense challenges to access finance, technological and unstable market conditions (Hyder et al., 2024). These issues highlight the need to gain deeper insight into how internal HR activities, leadership development and stakeholder involvement interactively affect the adoption and implementation of green supply chain practices. Further, although some past researchers have studied the contribution of GHRM or leadership alone, few have investigated combined impact of GHRM, GTL, SRM and CRM on GSCM, especially in developing economies that have dynamic and unpredictable business environments.

This research will fill these gaps by exploring the direct and indirect associations between GHRM, GTL, SRM, CRM, and GSCM in businesses that work in Pakistan. The study combines the lessons of the resource-based theory and the stakeholder

theory to explain the role of internal capabilities, leadership behaviors, and stakeholder relationships in accomplishing sustainability results. Besides making theoretical contributions in the relationship between HR, leadership and supply chain management in an integrated framework, the study offers practical guidance to managers and policy makers who must pursue effective sustainability interventions in resource limited and dynamic environments. Finally, the research will contribute to the existing knowledge on how organizations in Third World nations can use human and relational resources strategically to improve environmental performance and gain long term competitive advantage.

2. Literature Review

2.1 Theoretical Framework

The Stakeholder Theory provides a considerable background of how organizations employ the concept of sustainability in practice, by considering the interests of different stakeholders; they are the employees, the suppliers and the customers (Jamali, 2008). In the context of the given research, Green Human Resource Management (GHRM) can be defined as a strategic approach to engaging the internal stakeholders in the development of environmentally conscious behavior, as well as influencing the external ones with Supplier Relationship Management (SRM) and Customer Relationship Management (CRM) (Veerasamy et al., 2024). The fulfillment of the expectations and requirements of these stakeholders could assist organizations in ensuring that sustainability efforts are embedded across the supply chain and an alignment of the fit between internal proceedings and external relationships is created. This school of thought brings out the spirit of human and relational resource equilibrium to achieve environmental performance and sustainability in operations (Gualandris et al., 2015).

Resource-Based View (RBV) is a variation of this point of view, although it focuses on how organizational resources and capabilities may bring about the competitive advantage (Madhani, 2009). GHRM develops human capital with the help of green competencies, and leadership skills, among which are Green Transformational Leadership (GTL), which turn these resources into environmental action programs (SANGADJI & ISLAMI, 2024). Furthermore, organization capabilities of supplier and customer relationship management externalize the internal resources ensuring that sustainability is established within the supply chain (Paulraj, 2011). With these unique human and relationship resources, there is an opportunity of organizations having good green supply chain practices that are associated with operational and environmental benefits in the long run. Together, the Stakeholder Theory and RBV can be adopted as a holistic approach as regards internal and external capabilities to achieve sustainable outcomes in the context of organizational processes.

2.2 Hypothesis Development

2.2.1 Green Transformational Leadership & Supplier Relationship Management

Green Human Resource Management (GHRM) is the strategic course that implies introducing the notion of sustainability into the organizational practice comprising of green recruitment, training, performance appraisal, and employee engagement practices (Jamil et al., 2023). Once the companies embrace the values of environment in their HR practice, they can be confident that the employees will behave in a better environmental way, and the foundation of Green Transformational Leadership (GTL) (Wiredu et al., 2023). Leaders developed in a green-focused culture have a higher chance of inspiring, motivating, and leading their teams towards more sustainable activities, as well as act as change agents to environmental initiatives throughout the organization (Nawaz et al., 2025). It means that GHRM is not the management of human resources, but it is the action that influences leadership behaviors providing sustainability policies with a real implementation. Besides shaping internal leadership, GHRM also has a significant role to play in Supplier Relationship Management (SRM) by promoting culture in which sustainability has become an

organizational value (Dahinine et al., 2024). It has been found that companies that apply GHRM tend to hire suppliers that comply with environmental policies, work on more sustainable projects, and make sustainability a part of supplier selection and assessment (Leidner et al., 2019). Through the integration of the internal culture to take place with external alliances, GHRM makes sure that the practice of sustainability goes through the whole supply chain to enhance the environmental responsibility within and outside of the organization.

H1: Green Human Resource Management has a direct positive relationship with Green Transformational Leadership

H2: Green Human Resource Management has a direct positive relationship with Supplier Relationship Management

2.2.2 Green Human Resource Management, Customer Relationship Management & Green Supply Chain Management

Green Human Resource Management (GHRM) is very instrumental in the conceptualization of Customer Relationship Management (CRM) since it has an influence on how employees interact with customers in ecologically responsible manners (Freitas et al., 2021). Trained and motivated employees who are rewarded to practice sustainability will be at a better position to convey the green initiatives to the customers, having a stronger customer interaction and consequently sustainable consumption behavior (Pellegrini et al., 2018). Inculcating environmental values in HR practices, organizations increase the quality of interaction with the customers and develop the sustainability-focused image.

Besides the influence on the relationship with the customers, GHRM is directly and substantially influenced by Green Supply Chain Management (GSCM) (Acquah et al., 2021). By implementing environmental requirements in the process of recruiting, training, and performance assessment, organizations promote environmental-friendly business operations in the procurement process, production cycles, and logistics (Hayyat, 2024). It proves that GHRM is not an internal workforce development tool, but it is a strategic force that can provide supply chain sustainability such that the implementation of green practices is a regular occurrence in the activities of the organization.

H3: Green Human Resource Management has a direct positive relationship with Customer Relayionship Management

H4: Green Human Resource Management has a direct positive relationship with Green Supply chain Management

2.2.3 Mediation by Green Transformational Leadership, Supplier Relationship Management, and Customer Relationship Management

Green Transformational Leadership (GTL) and its mediating effect has been universally known as an important tool in which Green Human Resource Management (GHRM) can impact organizational sustainability (SANGADJI & ISLAMI, 2024). Leaders developed within a green-based HR system inspire and motivate workers to embrace green practices that are environmentally friendly, and they can easily convert HR policies to green programs that can be implemented in the organization (Dahinine et al., 2024). Through such leadership, GHRM can improve engagement of employees on sustainability in addition to improving the overall contributions to Green Supply Chain Management , and that is where the leadership factor plays a decisive role in mediating the relationship between HR practices and operational environmental performance.

Besides leadership, Supplier Relationship Management and Customer Relationship Management (CRM) are also important mediators between GHRM and GSCM (Freitas et al., 2021). High-intensity green HR organizational culture implies cooperating with suppliers who are aware of environmental issues, incorporating the principles of sustainability into the procurement and working processes, and increases the supply chain greenness (Palladino & Marchesin, 2022). Equally, employees who are trained in environmental issues implement the customers in sustainable activities, which create the demand for green products and services and

indirectly in green supply chains (Barakat et al., 2023). Collectively, GTL, SRM, and CRM demonstrate how GHRM brings about sustainability by delivering internal leadership, as well as external stakeholder engagement that offers a holistic lineage between the HR practices and the green supply chain performance.

H5: Green Transformational Leadership mediates the relationship between Green Human Resource Management and Green Supply Chain Management

H6: Supplier Relationship Management mediates the relationship between Green Human Resource Management and Green Supply Chain Management

H7: Customer Relationship Management mediates the relationship between Human Resource Management and Green Supply Chain Management

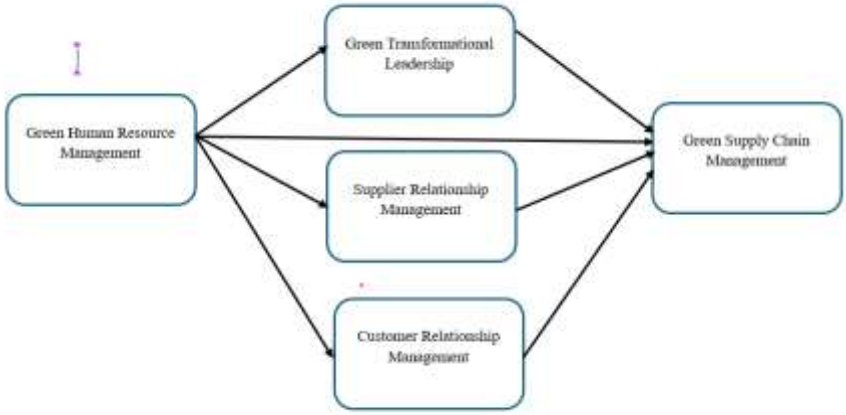

Figure 1: Conceptual Framework

3. Methodology

3.1 Design and Data Collection

The study sample included the HR manager, supply chain manager, and sales/customer services manager of different organizations in Pakistan. A self-administered questionnaire was chosen to gather primary data using a questionnaire that was developed based on the established scales in the previous studies. The questionnaire was constructed on seven-point Likert scale, as recommended by (Hox & Boeije, 2005). As recommended by Mehmood et al. (2012), a probability-based random sampling method was used to make the sample representative. Out of the 600 questionnaires that were handed over to the target population, 550 questionnaires were returned leading to a response rate of around 91.61. Following the elimination of incomplete or inconsistent questionnaires, 517 responses were used during empirical analysis and 33 were eliminated because of missing values. To have statistically strong inferences, a two tailed test was conducted with the level of significance at 5 percent (0.05).

3.2 Measures

All the measures applied to this research were based on the instruments that have been used before and that guarantees that the constructs could be measured in a systematic manner in terms of reliability and validity. The answers gained in the surveys were noted on a seven-point Likert scale. The Green Human Resource management (GHRM) was assessed on a four-item scale based on a scale by Dahinine et al. (2024) and the Green Transformational Leadership (GTL) was measured on a six-item scale by the scale used by (Dahinine et al., 2024). Supplier Relationship Management (SRM) measured on a five-item basis based on the previous research of (Dahinine et al., 2024). Customer Relationship Management (CRM) was assessed based on four items based on the literature of (Dahinine et al., 2024), and Green

Supply Chain Management (GSCM) was evaluated using three items based on the study of (Roh et al., 2022). The study has used these well-known and valid scales, which helped to maintain consistency and strength of capturing the views of the respondents on the adoption of green HR practices, leadership behavior, and sustainable supply chain efforts in their organizations.

4. Empirical Findings

PLS-SEM is generally acknowledged as a powerful method of analysis because it can be used to investigate several relationships at once (Rasoolimanesh & Ali, 2018). The latter is specifically appreciated because it is more flexible in testing the complex models (Ringle, 2005) and because it can be used in cases when the sample size is small or when the data cannot be considered normative (Sarstedt et al., 2016). Based on the steps suggested by (Henseler et al., 2009), this research utilized a two-step PLS-SEM analysis that was conducted via SmartPLS. The initial phase was the confirmation factor analysis (CFA) to evaluate the measurement model and assure convergent and discriminant validity. The path analysis was conducted in the second step whereby the structural model was used together with the mediation and moderation effects to test the hypothesized relationships. Such intense methodology made it possible to study the interconnections between the variables of the study in a detailed way and was able to offer an extensive understanding of the mechanisms underlying the relationships between them.

4.1 Measurement Model Assessment

The measurement model demonstrates high-quality validity and reliability with all constructs of the study being effectively measured. The factors loadings on all items are between 0.838 and 0.909, which is much higher compared to the recommended factor loading of 0.7 (Hair et al., 2016). This implies that each of them is highly effective predictors of their individual construct and significant contribution to the measure of the desired latent variable. The constructs with great item loadings are also Customer Relationship Management, Green Human Resource Management, Green Supply Chain Management, Green Transformational Leadership and Supplier Relationship Management so that they are sufficient to be measured.

Regarding reliability, the Alpha Cronbach and Composite Reliability of showed that there was high internal consistency of all constructs. Cronbach Alpha is between 0.853 and 0.933, CR between 0.911 and 0.947, which is more than the usual established alpha of 0.7. This ascertains the fact that the items in each construct are always used to measure the same construct. Also, the convergent validity, which was measured by Average Variance Extracted (AVE), is high with an average of 0.750 -0.773 which is above the minimum recommended of 0.5 (Fornell and Larcker, 1981). All these findings are indicative that the measurement model is both reliable and valid which will give a good basis to undertake structural analysis, including direct and mediated tests of relationships between the study variables.

Table 1: Convergent Validity

	Items	Factor Loadings	Alpha	CR	AVE
Customer Relationship Management	CRM1	0.871	0.902	0.931	0.772
	CRM2	0.882			
	CRM3	0.897			
	CRM4	0.865			
Green Human Resource Management	GHRM1	0.838	0.899	0.929	0.767
	GHRM2	0.909			

	GHRM3	0.881			
	GHRM4	0.874			
Green Supply Chain Management	GSCM1	0.862	0.853	0.911	0.773
	GSCM2	0.894			
	GSCM3	0.882			
Green Transformational Leadership	GTL1	0.857	0.933	0.947	0.750
	GTL2	0.859			
	GTL3	0.873			
	GTL4	0.848			
	GTL5	0.881			
	GTL6	0.878			
Supplier Relationship Management	SRM1	0.883	0.921	0.941	0.760
	SRM2	0.881			
	SRM3	0.866			
	SRM4	0.844			
	SRM5	0.885			

The discriminant validity of the constructs was measured based on the Fornell-Larcker criterion, as well as the Heterotrait-Monotrait (HTMT) ratio, so that none of the constructs overlap. Based on the Fornell-Larcker criterion, the square root of the AVE of any construct also exceeds and is larger than the correlations of the construct to other constructs. As an illustration, the square root of AVE of CRM (0.879) surpasses the correlations of CRM with GHRM, GSCM, GTL and SRM. The same applies to GHRM (0.876), GSCM (0.879), GTL (0.866) and SRM (0.872) which also meet this criterion which implies that the constructs are different enough. The HTMT ratios also purport discriminant validity, with all the values below the conservative validity of 0.85 with the greatest value of 0.824 between CRM and GSCM. The values of other HTMTs, including 0.822 between CRM and GHRM and 0.792 between GTL and SRM, are also acceptable. These findings show that the constructs used in the study CRM, GHRM, GSCM, GTL, and SRM are empirically different, which makes the use of the measurement model suitable in the further structural analysis.

Table 2: Discriminant Validity (Fornell-Larcker Criteria)

	CRM	GHRM	GSCM	GTL	SRM
CRM	0.879				
GHRM	0.890	0.876			
GSCM	0.875	0.887	0.879		
GTL	0.919	0.892	0.885	0.866	
SRM	0.902	0.909	0.890	0.920	0.872

Table 3: Discriminant Validity (HTMT Ratio)

	CRM	GHRM	GSCM	GTL	SRM

CRM				
GHRM	0.822			
GSCM	0.824	0.810		
GTL	0.756	0.774	0.790	
SRM	0.765	0.799	0.750	0.792

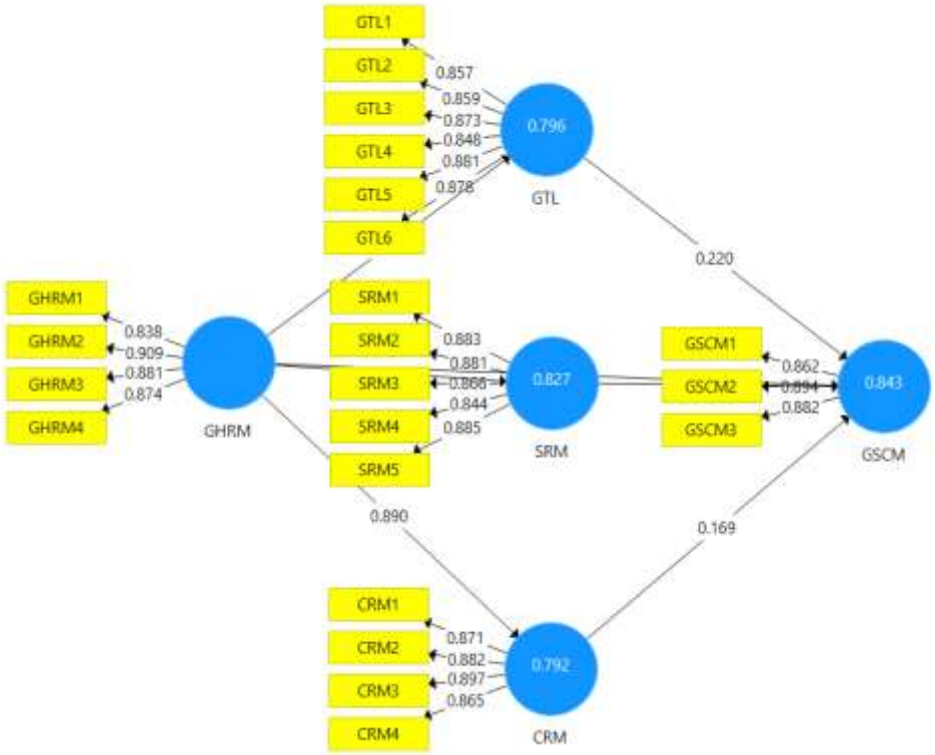

Figure 2: Measurement Model

4.2 Structural Model Assessment

The structural model evaluation indicates great relationships between the study constructs which affirm both indirect and direct effects. Looking at its direct effects, Green Human Resource Management (GHRM) has positive strong effects on Customer Relationship Management (CRM) (β = 0.890, p < 0.001), Green Transformational Leadership (GTL) (β = 0.892, p < 0.001), Supplier Relationship Management (SRM) (0.909, p < 0.001), and Green Supply Chain Management (GSCM) (0.311, p < 0 These findings reveal that a good GHRM practice has a significant impact on leadership practices, stakeholder management and sustainability of the supply chain. Also, it is observed that CRM (0.169, p = 0.002), GTL (0.220, p = 0.007), SRM (0.253, p less than 0.001) have significant effects on GSCM and indicate that internal leadership and engagement by external stakeholders have significant impacts on enhancing green supply chain practices.

The R 2 values also indicate the explanatory ability of the model, with GSCM (R 2 = 0.841), CRM (R 2 = 0.792), GTL (R 2 = 0.795) and SRM (R 2 = 0.827) having a high level of variance explained by the predictors. In terms of indirect effects, mediating effect of CRM (0:150, p=0.002), GTL (0:196, p=0.006), as well as SRM (0:230, p=0.001) in the relationship between GHRM and GSCM are significant, and demonstrate that GHRM has a significant impact on green supply chain performance not only

directly but also via significant role of the leadership and stakeholder management. In general, the findings indicate the importance of GHRM to promote sustainability in both internal and external organizational operations, which supports the strength of the proposed structural model.

Table 4: Path Analysis (Direct Effect)

Direct Effects	Beta	(STDEV)	T Statistics	P Values	LL	UL
CRM -> GSCM	0.169	0.055	3.090	0.002	0.062	0.271
GHRM -> CRM	0.890	0.012	74.017	0.000	0.866	0.912
GHRM -> GSCM	0.311	0.064	4.828	0.000	0.185	0.436
GHRM -> GTL	0.892	0.016	56.989	0.000	0.858	0.918
GHRM -> SRM	0.909	0.011	84.207	0.000	0.884	0.927
GTL -> GSCM	0.220	0.081	2.729	0.007	0.066	0.377
SRM -> GSCM	0.253	0.069	3.645	0.000	0.105	0.374

Table 5: R square

	R Square
CRM	0.792
GSCM	0.841
GTL	0.795
SRM	0.827

Table 6: Path Analysis (Indirect Effects)

	Beta	(STDEV)	T Statistics	P Values	LL	UL
GHRM -> CRM -> GSCM	0.150	0.048	3.105	**0.002**	0.058	0.243
GHRM -> GTL -> GSCM	0.196	0.071	2.764	**0.006**	0.056	0.333
GHRM -> SRM -> GSCM	0.230	0.063	3.641	**0.000**	0.098	0.338

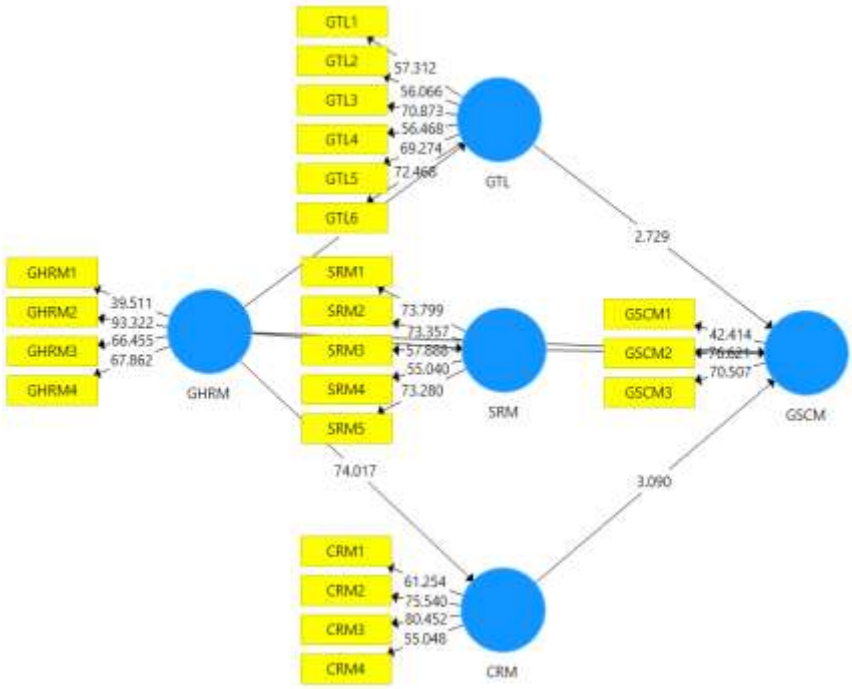

Figure 3: Structural Model Assessment

5. Discussion and Implications

The outcomes of this research make it clear that Green Human Resource Management is of strategic importance when it comes to promoting the sustainability of an organization. In line with previous studies, GHRM was also identified to significantly positively influence Green Transformational Leadership, Supplier Relationship Management, Customer Relationship Management and Green Supply Chain Management. This is why these findings indicate that green HR practices, including green recruitment, training, performance assessment, and employee engagement, work well to develop leaders who lead sustainability initiatives, improve working relationships with suppliers, and build environmentally friendly relationships with customers. This is in line with the viewpoint that the internal HR practices form a pillar mechanism for achieving both human and operational sustainability outcomes with the workforce being a key asset in converting a sustainability policy into practice.

The mediation of the effects of GHRM on the green supply chain performance is made evident in the mediating roles of GTL, SRM and CRM. Transitional leaders inspire the employees to be environmentally friendly, a culture of environmental responsibility within an organization is created. Equally, strong relationships with suppliers will make sure that sustainability efforts take root throughout the supply chain, and proper engagement with customers will promote environmentally friendly consumption that will further enhance influence of internal efforts. The results prove that sustainability is not only an internal organizational process but also a factor in how companies conduct and shape the major external stakeholders.

Besides, the structural model also has a high explanatory power, as the R2 values show, and this fact demonstrates the significance of these relations. The paper has created a basis that integrating and being holistic, which involves the combination of GHRM, leadership development and stakeholder management is essential in ensuring that holistic sustainability outcomes are achieved. It also reveals the strategic location of

HR in the way that the culture of organization and the operations, which are involved, are inclined to the development of the environmental goals. Practically, it means that those organizations that wish to be better about green supply chain cannot just be environmentally friendly in their HR policies but actively develop their leadership potential and establish mutually beneficial relations with suppliers and customers.

Comprehensively, this study contributes to the added understanding of how internal human resource practices in combination with leadership and stakeholder engagement strategies can facilitate a facilitating relationship which encourages environmental performance within the entire organization. It contributes to the fact that sustainability is a concept with multiple dimensions and that it requires a combined effort not only in the different organizational functions, but also in the external relations with the external world to achieve significant and sustainable green outcomes.

5.1 Theoretical Contribution

This study has numerous extremely important contributions to the existing literature on sustainability, human resource management, and the supply chain practices. Firstly, it advances the field of Green Human Resource Management, demonstrating that it is not only critical in the determination of the behaviors of employees, but also that of Green Transformational Leadership and enhancement of relationships with suppliers, including customers. This study brings the concept of leadership and stakeholder management into the GHRM model, and this makes the study a more holistic approach of how HR practices can be implemented to influence the performance of an organization in terms of sustainability outside the internal workforce.

Second, the research identifies the processes in which GHRM influences Green Supply Chain Management (GSCM). It fills the gap between the human resource strategies and the supply chain sustainability by empirically demonstrating the mediating role of GTL, Supplier Relationship Management and Customer Relationship Management between internal HR practices and operational and relational outcomes. It is also a useful addition to the theoretical discussion on the interrelatedness of HR, leadership, and stakeholder engagement by highlighting that sustainability is a multi-dimensional concept that should be addressed via internal and external synchronous work.

Lastly, the research adds to the contextual theory development by offering evidence of the operations of GHRM and green supply chain practices in the context of emerging markets, which is based on giving evidence of organizations in Pakistan. This fills the literature gap since most of the earlier studies have revolved around developed economies thus increasing the generalizability and applicability of sustainability theories in various organizational and cultural contexts.

5.2 Practical Implications

The results of the study have some relevant implications for the practitioners who seek to make organizations sustainable. To start with, the HR managers must focus on adopting the Green Human Resource Management practices such as the green recruitment, training, performance appraisal and employee engagement programs. Such initiatives are not only able to influence the behavior of employees to be more environmentally conscious but also develop Green Transformational Leadership that is necessary to propel the sustainability initiatives within the organization.

Second, the supply chain managers ought to aim at enhancing Supplier Relationship Management through actively involving suppliers in environmentally friendly activities and integrating sustainability policies into procurement and in the evaluation process. These initiatives entail the fact that green activities are integrated along the supply chain, which positively affects the overall contributions to the sustainability activities internally.

Third, Customer Relationship Management can be used by customer-facing managers to ensure sustainability-intensive relationships with clients. Establishing demands to purchase eco-friendly

products and properly conveying the green activities of the organization are, therefore, ways to help companies increase their focus on the environmentally conscious consumption of goods and promote the wider adoption of green practices.

Lastly, the research paper indicates the need to make sustainability comprehensive and holistic. The leaders of any organization must know that GHRM is not enough, and it is the integration of green HR practices, transformational leadership, and proactive stakeholder involvement that yields valuable and sustainable sustainability results. By matching internal performance with external relations, organizations are not only able to improve their environmental performance but also attain a competitive advantage in a marketplace that is becoming increasingly focused on sustainable business operations.

5.3 Limitations and Future Research

This study has numerous limitations despite its contributions, which need to be mentioned. To begin with, the study utilized a cross-sectional research design, which does not allow making causal conclusions between Green Human Resource Management, leadership, stakeholder management, and Green Supply Chain Management. Future research might take a longitudinal design to represent the dynamic nature of such relationships over time and give more evidence of causality.

Second, the supply chain managers will strive to make the Supplier Relationship Management (SRM) stronger by engaging the suppliers in responsible environmental management and integrating the issue of sustainability in the procurement and evaluation processes. These projects can ensure that the supply chain integrates the green practices to ensure that the internal sustainability initiatives are more effective.

Third, the customer-facing managers should use Customer Relationship Management to develop interactions with the clients based on sustainability. The encouragement of green consumption and the effective communication of the environmental activities conducted by the organization will assist companies to raise the demand of green products and the general practice of green activity.

Finally, the study explains the importance of integrated and holistic approaches to sustainability. It is essential that leaders of the organizations should not think that GHRM can be called a miracle, because it is the combination of the green HR policy, transformational leadership style, and active stakeholder engagement that becomes the keys to achieving long-term and significant sustainability outcomes. In the process of harmonizing internal strength and external relations, the organizations can not only improve their performance in the environmental field but also gain a competitive advantage in an environment by becoming sustainability-conscious in business sense.

5.4 Conclusion

The study is very powerful in proving the strategic value of Green Human Resource Management in ensuring sustainability in an organization. Organizational HR practices can be reinforced by integrating green values to create a Green Transformational Leadership, reinforced relationships with suppliers and customers, and Green Supply Chain Management. The results have shown that sustainable development is impossible without the participation of internal policies; efficient leadership and involvement of stakeholders will also play a vital role, and the relationship between the human, operational, and relational aspects of environmental goal attainment will be interdependent. Further, the research reveals that the role of GHRM in supply chain sustainability is strongly mediated by leadership and stakeholder management procedures in which a comprehensive strategy integrating green HR practices, transformational leadership and proper stakeholder management is essential in providing long-term and significant sustainability results. The study contributes to the literature on HR, leadership, and supply chain management by filling the gaps that exist between them and providing practical advice to managers who are interested in introducing effective sustainability programs. Overall, the research

supports the role of harmonization of internal organizational abilities with external stakeholder interaction, proving that the combination of green practices in HR, leadership and in the supply chain management help organizations to meet environmental objectives, improve operational effectiveness and create stakeholder satisfaction and resilience in the long term.

References

Acquah, I. S. K., Agyabeng-Mensah, Y., & Afum, E. (2021). Examining the link among green human resource management practices, green supply chain management practices and performance. Benchmarking: An International Journal, 28(1), 267-290.

Aray, Y., Veselova, A., Knatko, D., & Levchenko, A. (2021). Drivers for adoption of sustainability initiatives in supply chains of large Russian firms under environmental uncertainty. Corporate Governance: The International Journal of Business in Society, 21(2), 322-338.

Baah, C., Agyabeng-Mensah, Y., Afum, E., & Mncwango, M. S. (2021). Do green legitimacy and regulatory stakeholder demands stimulate corporate social and environmental responsibilities, environmental and financial performance? Evidence from an emerging economy. Management of Environmental Quality: An International Journal, 32(4), 787-803.

Barakat, B., Milhem, M., Naji, G. M. A., Alzoraiki, M., Muda, H. B., Ateeq, A., & Abro, Z. (2023). Assessing the impact of green training on sustainable business advantage: exploring the mediating role of green supply chain practices. Sustainability, 15(19), 14144.

Boeske, J. (2023). Leadership towards sustainability: a review of sustainable, sustainability, and environmental leadership. Sustainability, 15(16), 12626.

Dahinine, B., Laghouag, A., Bensahel, W., Alsolami, M., & Guendouz, T. (2024). Modelling the combined effect of green leadership and human resource management in moving to green supply chain performance enhancement in Saudi Arabia. Sustainability, 16(10), 3953.

Das, S., & Hassan, H. K. (2022). Impact of sustainable supply chain management and customer relationship management on organizational performance. International Journal of Productivity and Performance Management, 71(6), 2140-2160.

Freitas, W. R. d. S., Caldeira Oliveira, J. H., Teixeira, A. A., & Stefanelli, N. O. (2021). Green human resource management, corporate social responsibility and customer relationship management: relationship analysis in the Brazilian context. International Journal of Productivity and Performance Management, 70(7), 1705-1727.

Gualandris, J., Klassen, R. D., Vachon, S., & Kalchschmidt, M. (2015). Sustainable evaluation and verification in supply chains: Aligning and leveraging accountability to stakeholders. Journal of operations management, 38, 1-13.

Hayyat, A. (2024). The effect of organizational green operations and digitalization to promote green supply chain performance. In Human Perspectives of Industry 4.0 Organizations (pp. 183-223). CRC Press.

Henseler, J., Ringle, C. M., & Sinkovics, R. R. (2009). The use of partial least squares path modeling in international marketing. In New challenges to international marketing (pp. 277-319). Emerald Group Publishing Limited.

Hox, J. J., & Boeije, H. R. (2005). Data collection, primary versus secondary.

Hyder, M., Ahsan, N., & Mustafa, S. (2024). Breaking Barriers: Technological Adoption Challenges in Organizations of Developing Economies-A Case of Pakistan. Voyage Journal of Educational Studies, 4(2), 129-143.

Jamali, D. (2008). A stakeholder approach to corporate social responsibility: A fresh perspective into theory and practice. Journal of business ethics, 82(1), 213-231.

Jamil, S., Zaman, S. I., Kayikci, Y., & Khan, S. A. (2023). The role of green recruitment on organizational sustainability performance: A study within the context of green human resource management. Sustainability, 15(21), 15567.

Kumar, L., Nadeem, F., Sloan, M., Restle-Steinert, J., Deitch, M. J., Ali Naqvi, S., Kumar, A., & Sassanelli, C. (2022). Fostering green finance for sustainable development: A focus on textile and leather small medium enterprises in Pakistan. Sustainability, 14(19), 11908.

Leidner, S., Baden, D., & Ashleigh, M. J. (2019). Green (environmental) HRM: Aligning ideals with appropriate practices. Personnel Review, 48(5), 1169-1185.

Letunovska, N., Offei, F. A., Junior, P. A., Lyulyov, O., Pimonenko, T., & Kwilinski, A. (2023). Green supply chain management: The effect of procurement sustainability on reverse logistics. Logistics, 7(3), 47.

Madhani, P. (2009). Resource based view (RBV) of competitive advantage: an overview. Pankaj M Madhani.

Mehmood, T., Liland, K. H., Snipen, L., & Sæbø, S. (2012). A review of variable selection methods in partial least squares regression. Chemometrics and intelligent laboratory systems, 118, 62-69.

Miceli, A., Hagen, B., Riccardi, M. P., Sotti, F., & Settembre-Blundo, D. (2021). Thriving, not just surviving in changing times: How sustainability, agility and digitalization intertwine with organizational resilience. Sustainability, 13(4), 2052.

Nawaz, M. Y., Jamil, A., Akram, A., & Saleem, K. (2025). Impact of Green Transformational Leadership on Corporate Environmental Performance with the Mediating Role of Dynamic Capabilities. Indus Journal of Social Sciences, 3(2), 986-1009.

Odeyemi, O., Usman, F. O., Mhlongo, N. Z., Elufioye, O. A., & Ike, C. U. (2024). Sustainable entrepreneurship: A review of green business practices and environmental impact. World Journal of Advanced Research and Reviews, 21(2), 346-358.

Ojokuku, R., Akanbi, F. K., & Abiodun, Y. A. (2025). GREEN HUMAN RESOURCE MANAGEMENT (GHRM): DRIVING SUSTAINABLE ORGANIZATIONAL PRACTICES. KINGS JOURNAL OF ENTREPRENEURSHIP, INNOVATION, AND MANAGEMENT (KJEIM), 1(1).

Palladino, G., & Marchesin, L. (2022). State of the art, barriers and supply chain collaboration of WEEE supply chains towards CE: a multiple case study.

Paulraj, A. (2011). Understanding the relationships between internal resources and capabilities, sustainable supply management and organizational sustainability. Journal of Supply Chain Management, 47(1), 19-37.

Pellegrini, C., Rizzi, F., & Frey, M. (2018). The role of sustainable human resource practices in influencing employee behavior for corporate sustainability. Business Strategy and the Environment, 27(8), 1221-1232.

Rasoolimanesh, S. M., & Ali, F. (2018). Partial least squares-structural equation modeling in hospitality and tourism. Journal of Hospitality and Tourism Technology, 9(3), 238-248.

Ringle, C. M. (2005). SmartPLS 2.0 (M3). http://www. smartpls. de.

Roh, T., Noh, J., Oh, Y., & Park, K.-S. (2022). Structural relationships of a firm's green strategies for environmental performance: The roles of green supply chain management and green marketing innovation. Journal of cleaner production, 356, 131877.

SANGADJI, E., & ISLAMI, M. I. (2024). Effect of Green Transformational Leadership on Organizational Environmental Performance: The Role of Green Human Resource Management Practices (Study on SMEs in The Embroidery Sector). International Journal of Economics & Management, 18(1).

Sarstedt, M., Hair, J. F., Ringle, C. M., Thiele, K. O., & Gudergan, S. P. (2016). Estimation issues with PLS and CBSEM: Where the bias lies! Journal of business research, 69(10), 3998-4010.

Shafiee, M. M., & Tabaeeian, R. A. (2021). Integrating knowledge-responsibility-performance via supplier relationship management. International Journal of Integrated Supply Management, 14(4), 445-466.

Veerasamy, U., Joseph, M. S., & Parayitam, S. (2024). Green human resource management and employee green behaviour: participation and involvement, and training and development as moderators. South Asian Journal of Human Resources Management, 11(2), 277-309.

Weber, P., & Kassab, E. (2024). The employee green behavior of green transformational leadership, green human resource management on the sustainable performance. Journal of Infrastructure, Policy and Development, 8(8), 4630.

Wiredu, J., Yang, Q., Saljoughipour, S., Olufunke, E. C., Sampene, A. K., & Brenya, R. (2023). Stimulating environmental performance through green human resource practice: Does green transformational leadership matter. Journal of Infrastructure, Policy and Development, 7(1), 2127.

Zhang, J., Adu Sarfo, P., Amankwah, O., George, N., Mohamed Wasaf, M., Appiah, A., & Bonzo, J. K. (2025). Harnessing the synergy between green organizational strategy and technological capability for sustainable development in SMEs in Sub-Saharan Africa. Business Process Management Journal.